REVISIONS			
REV	DESCRIPTION	DATE	APPROVED
A	SEE EO (1) 205 BKA 880		
	INC EO (2) 205 BKA 57	9-12-84	F. WINE

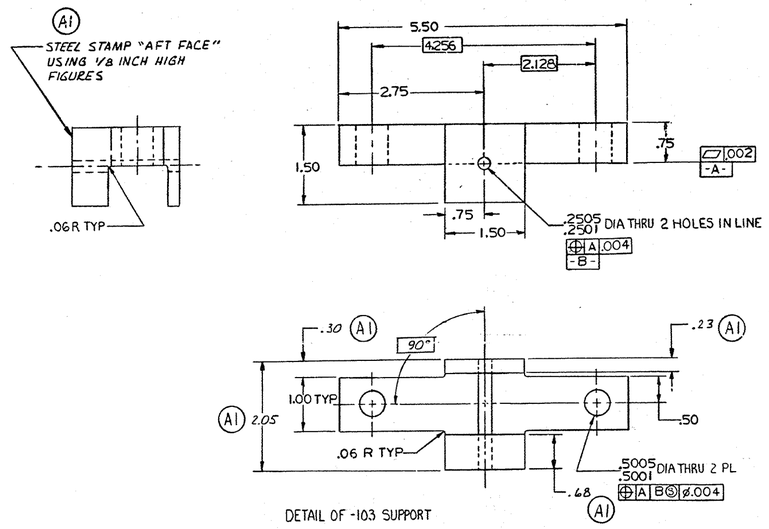

DETAIL OF -103 SUPPORT

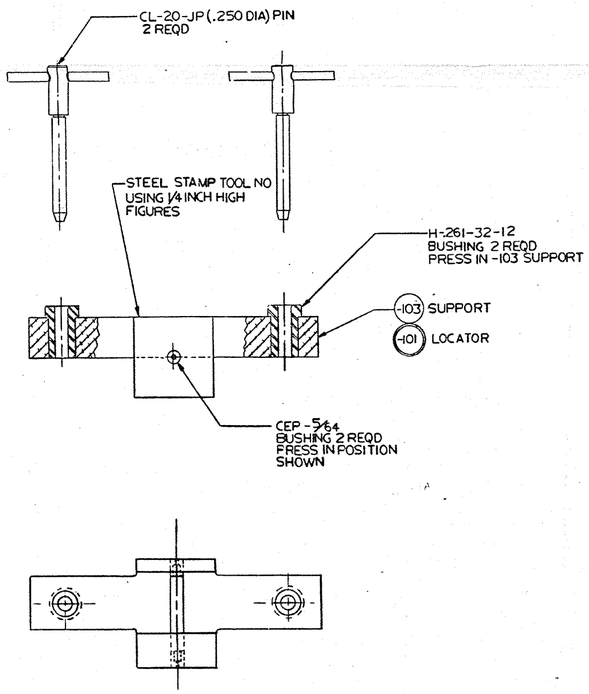

FILE COPY

SEE SEPARATE PARTS LIST

EWA 205 BKA 9.02 W.O. 284C

DASH NO.	NEXT ASSY	USED ON
-101	205 BKA 36	TEST
APPLICATION		

PROPRIETARY RIGHTS NOTICE

THESE DATA ARE PROPRIETARY TO BELL HELICOPTER TEXTRON. DISCLOSURE, REPRODUCTION, OR USE OF THESE DATA FOR ANY PURPOSE IS FORBIDDEN WITHOUT WRITTEN AUTHORIZATION FROM BELL HELICOPTER TEXTRON.

THE FOREGOING DOES NOT APPLY TO VENDOR PARTS.

UNLESS OTHERWISE SPECIFIED DIMENSIONS ARE IN INCHES
TOLERANCES ON DECIMALS XXX ±.010 XX ±.03 X ±.1 ANGLES ±1/2°
SURFACE ROUGHNESS PER ANSI B46.1
125 MACHINED SURFACES EXCEPT AS NOTED

DRAWN J. ALCON 8-21-79
CHECKED 9/27/79
STRESS 15 Oct 79
WEIGHTS
GROUP ENGR 10-17-79
DER
MET DESIGN
PROJECT 11/23/79
CUSTOMER

Bell Helicopter TEXTRON
Division of Textron Inc.

TITLE LOCATOR ASSEMBLY-HANGER BEARING, TAIL ROTOR DRIVE SHAFT

DWG SIZE F | CODE IDENT NO. 97499 | DWG NO. T103223

SCALE 1/1 & NOTED | ISSUED | SHEET 1 OF 1

T103223 A1

1 pc.
$486.22
4 weeks